Improving The Cross-Coupled Inverter

By NICHOLAS PRYOR

A simplified version of the Van Scoyoc circuit of 1948.

In these days of extreme amplifier bandwidth, a phase inverter with good balance and low reactive phase shift over a wide frequency range becomes a necessary part of any amplifier design. The circuit that most nearly meets these requirements is the cross-coupled inverter developed in 1948.

Phase shift is held to a minimum by the small number of phase shift points within the inverter. The low output impedance of the first stage minimizes high-frequency shift and direct coupling eliminates it at the low end. The only point of low-frequency shift is in the output capacitors and the following grid resistor; the bulk of the high-end shift is also due to the 30,000-ohm output impedance of this stage.

Theoretically perfect balance is obtained by applying the same signal to different elements of the inverting triodes as shown in Fig. 2. Other circuits either depend on inherent imbalance and feedback for operation (cathode-coupled and floating paraphase) or require precision components for approximate balance (split load and voltage dividing). Another feature of this circuit is constant balance at all frequencies. This is true because both halves of the signal pass through the same number of tubes and networks and both signal outputs are taken from similar elements of the output tubes (as opposed to the split load).

There are, however, some incorrect notions about the balancing in the cross-coupled inverter. First, with a single-ended input, the balancing control between the cathodes of the first stage does not balance the dynamic characteristics of the amplifier. It merely balances the tube bias and equalizes the sensitivity of the two inputs. Since neither of these is very critical in the improved model of the inverter, this control can be omitted as it was in the original Van Scoyoc circuit. Provision for dynamic balance is included elsewhere in the new circuit.

Also, the term "inherent balance" is somewhat misleading. Referring again to Fig. 2, it will be noted that both halves of the signal are equal only at the input of the second stage. This leaves variations in tubes and load resistors of the second stage to upset the balance. Another problem in the design is the high (30,000-ohm) output impedance, which limits the high-frequency response and causes clipping as grid bias reaches zero in the power output stage.

Both of these problems can be solved simply by the addition of another cathode follower to the circuit. Because of the low d.c. voltage at the output of the cathode follower, it can be direct-coupled to the power stage without many of the problems of bias and static balance that usually accompany direct coupling.

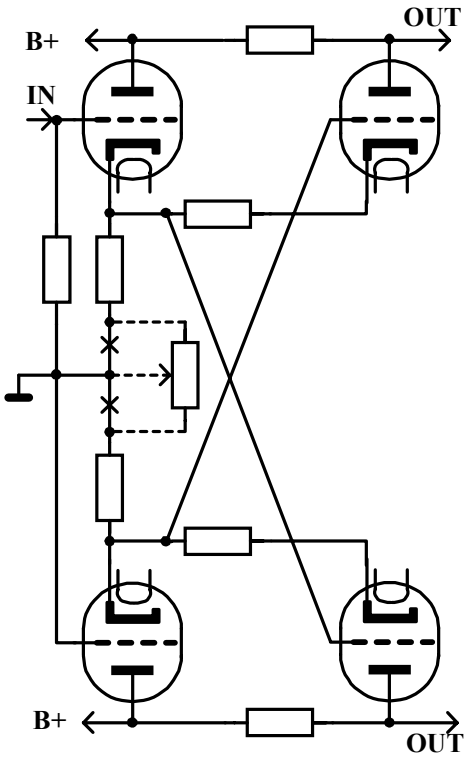

Fig. 1.
Original cross-coupled inverter as described by Van Scoyoc in 1948. Balance control, added later, is shown dashed.

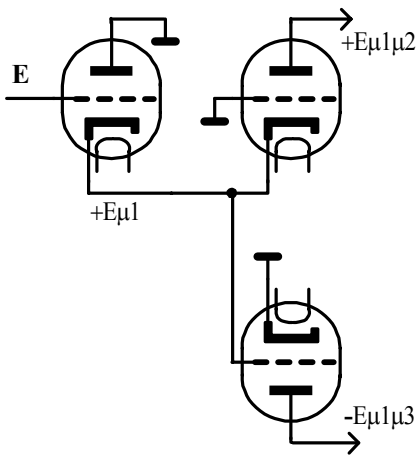

Fig. 2.
Simplified inverter circuit showing just a.c. paths, in interest of clarity.

Direct coupling here eliminates a low-frequency phase shift point thus maintaining the stability of the amplifier. The low output impedance reduces high-frequency shift and allows some power to be delivered to the power stage. It can also be shown by the design equations for cathode followers that the gain of the stage can be varied by variations in the cathode resistance. This provides a very convenient method for balancing the dynamic characteristics of the amplifier, as shown in Fig. 3. Operation of this control will

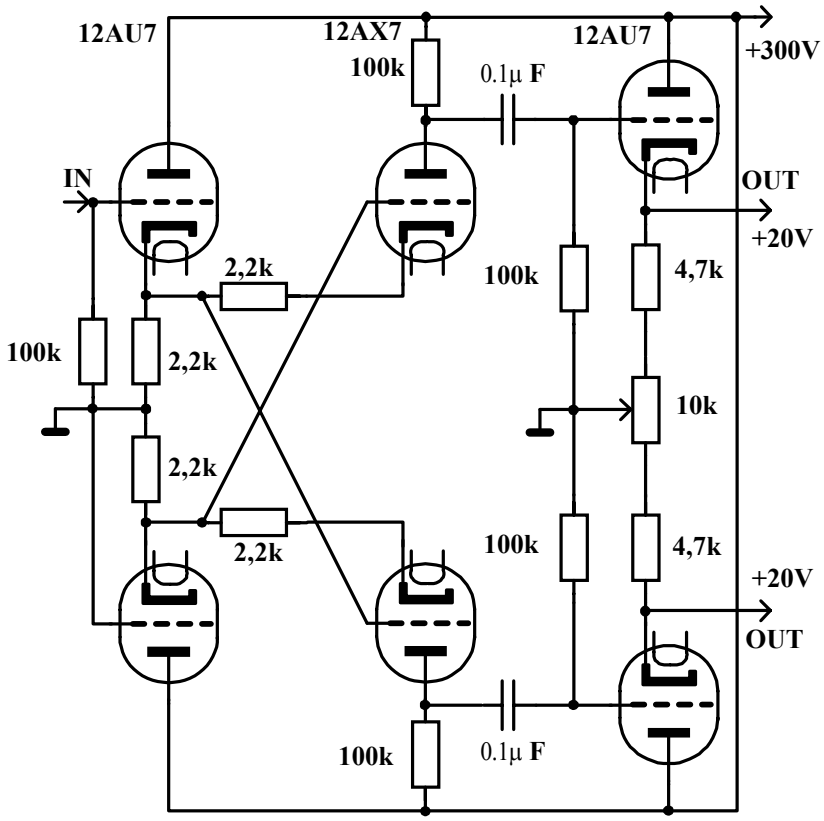

Fig. 3.
Cross-coupled inverter with cathode follower output.
Output leads should be connected directly to power tube grids. Cathode voltage of power tubes must be increased by 20 volts. Balance control illustrated will compensate for as much as a 6% imbalance.

cause a slight static imbalance in the power stage. It should be negligible, but the purist may compensate for it by a corresponding adjustment in the balance control of the power stage, if one is provided.

The main fault of this inverter is its low gain due to the two cathode followers. Most modern tuners and preamps, however, deliver enough voltage to drive it to full output. In general, this inverter should satisfy every requirement in amplifiers where less than 15 volts' drive is needed at the power stage grids.